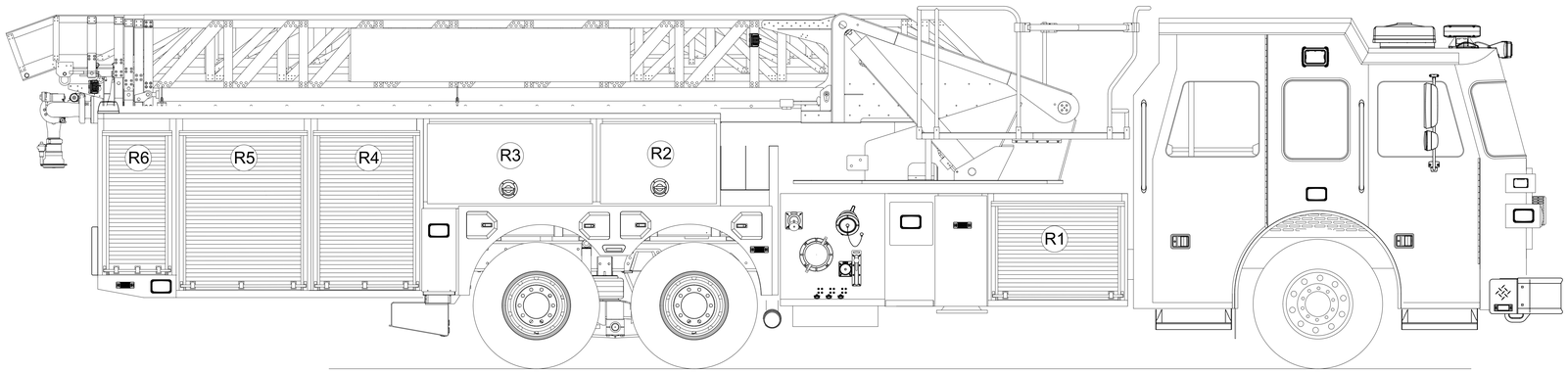
R6
R5
R4
R3
R2
R1

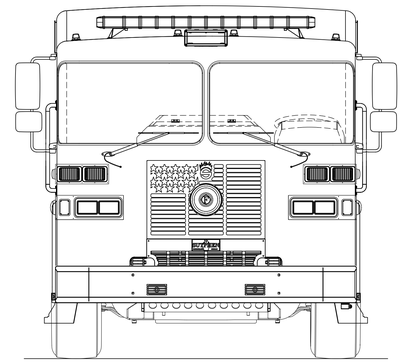

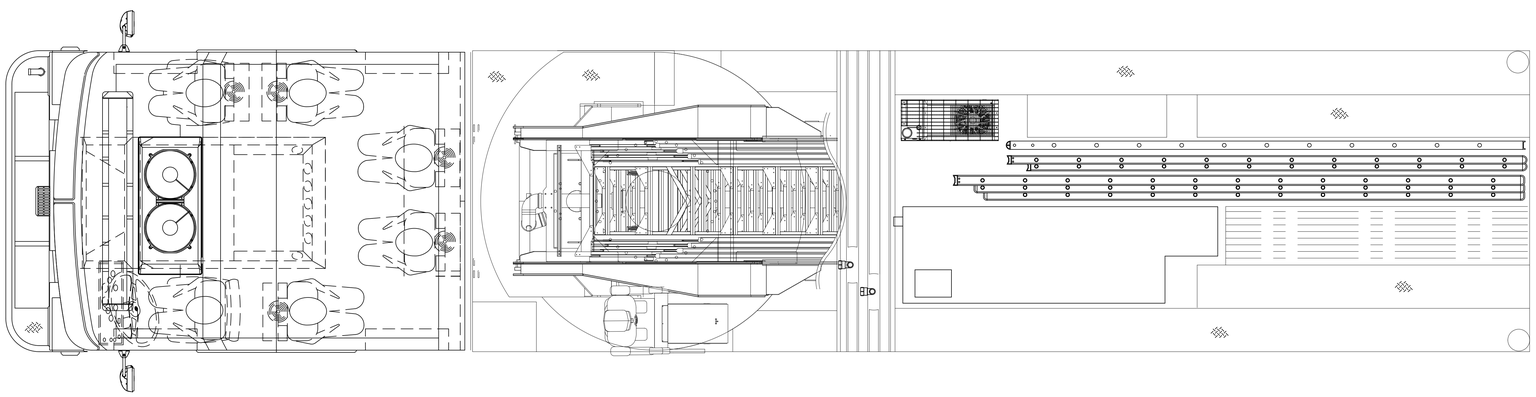

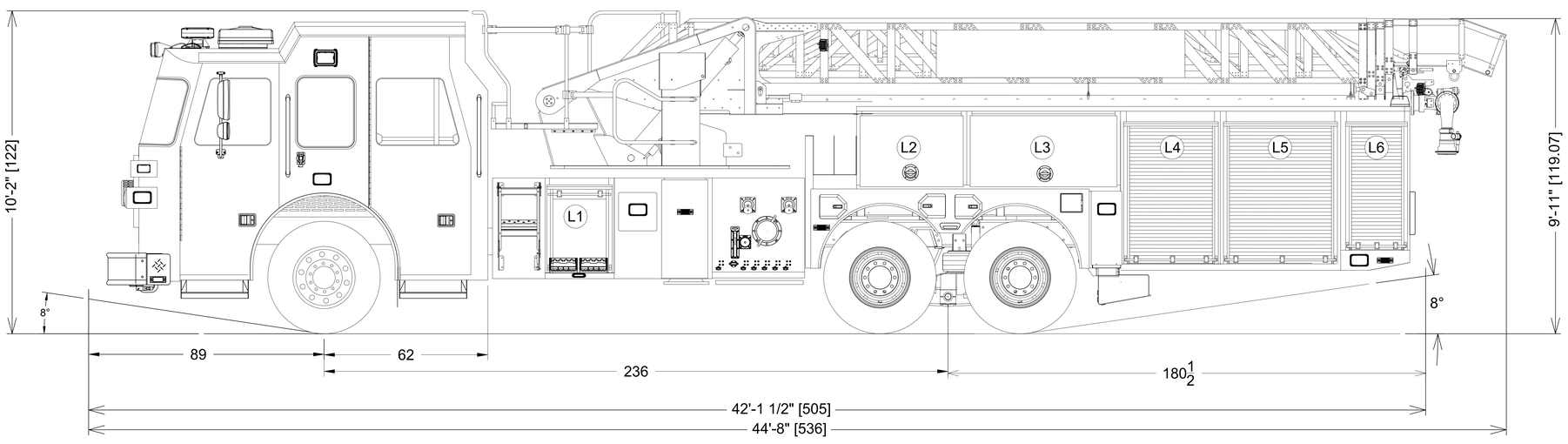
10'-2" [122]
8°
L1
L2
L3
L4
L5
L6
9'-11" [119.07]
8°
89
62
236
180 1/2
42'-1 1/2" [505]
44'-8" [536]

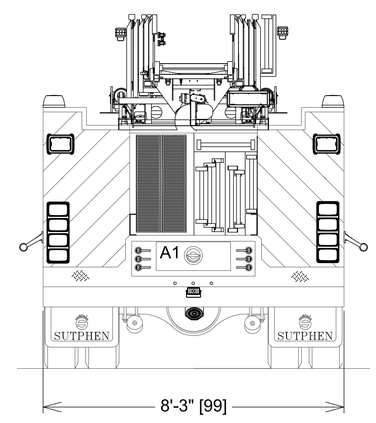
A1
SUTPHEN
SUTPHEN
8'-3" [99]